TEL 916-386-1430
FAX 916-386-0605

HANDALSTONE

Handalstone@sbcglobal.net
www.handalstone.com

Name: MADISON
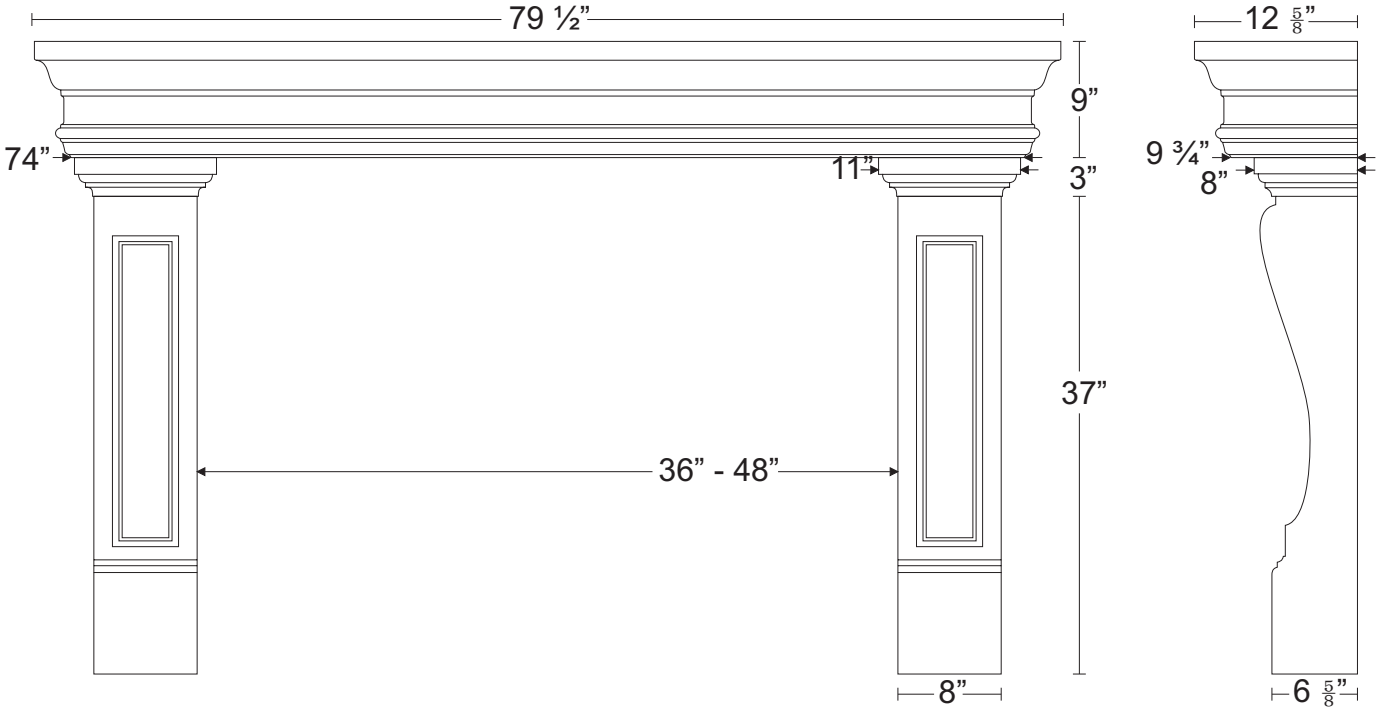
Product Code: FS230